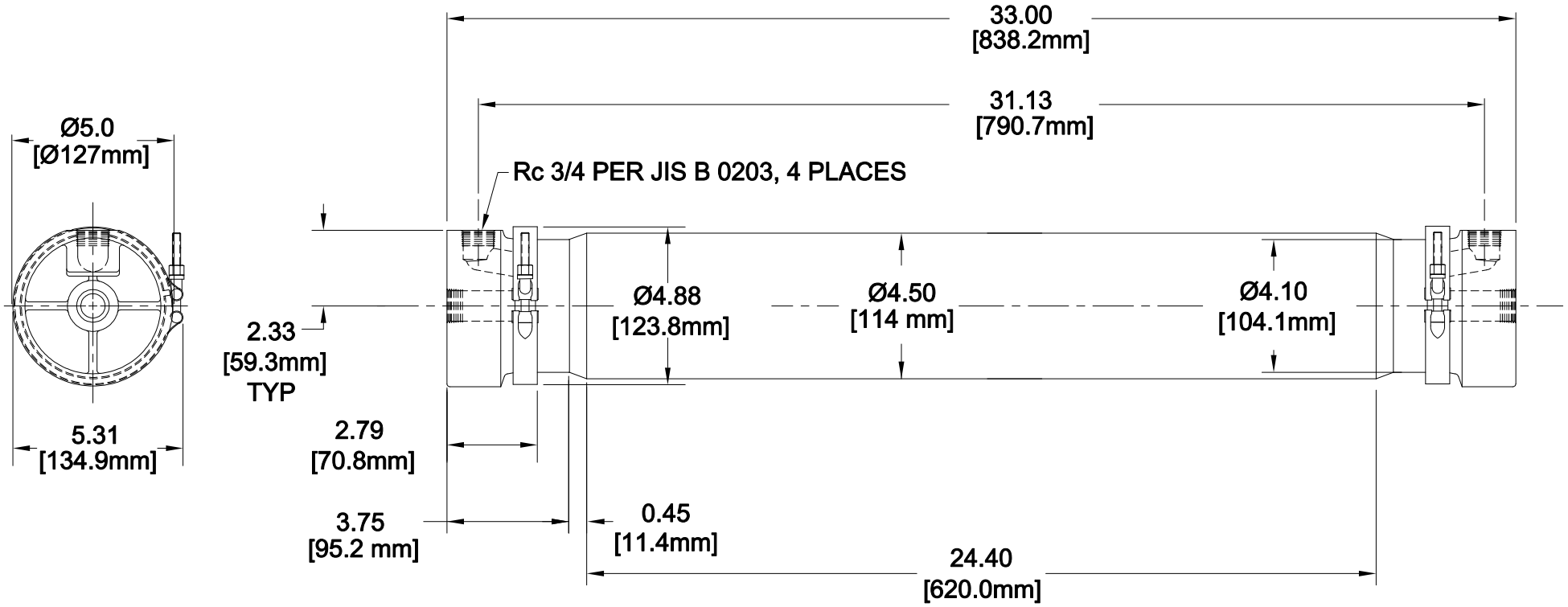

1	UPDATED FORMAT	SDM				06-08									

THE INFORMATION CONTAINED HEREIN IS CONFIDENTIAL. SUCH INFORMATION IS THE PROPERTY OF MEMBRANA AND MAY NOT BE USED BY, OR DISCLOSED TO, OTHERS WITHOUT THE PRIOR WRITTEN CONSENT OF MEMBRANA. THE INFORMATION CONTAINED HEREIN MAY NOT BE USED FOR ANY PURPOSE OTHER THAN THE EXPRESSED INTENT FOR WHICH IT WAS LENT. ©2002 MEMBRANA.

MEMBRANA
Underlining Performance

RFA NO | CA NO

DO NOT SCALE THIS DRAWING

THIRD ANGLE PROJECTION

REQD	PART	DRAWING NUMBER	DESCRIPTION	MATERIAL	REMARKS

DRAWN BY RHC 4-15-97
CHECKED BY
APPROVED BY
APPROVED BY
APPROVED BY

APPROVED FOR CONSTRUCTION
SUPERSEDES
SUPERSEDED BY

SHEET NO 1 OF 1
SCALE NONE

DRAWING NUMBER SMC-0104-12-3562
REVISION 1
PLAN FILE NO | POCKET NO | FOLDER NO

REF MACHINE

DRAWING TITLE 4 X 28 PP HOUSING 3/4" JIS PORTS

PLOTTED:

DWG. NO. SMC-0104-12-3562